PL08

Re-purposed Fish-Trap Lamp

Materials: Body: Bamboo
Rim ties: Rattan

Weight: 240g / 0.5lbs

Dimensions:
H 55cm / 22" W 30cm / 12"
Top opening: 6cm / 2.6"

Colors:
Natural bamboo

Bulb Recommendation:
10W LED or 18W CFL warm-white bulb

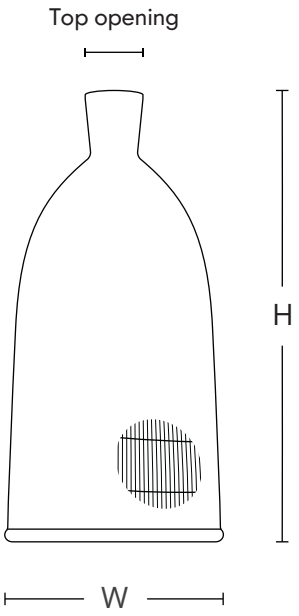

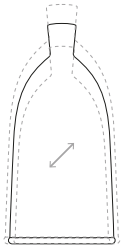

Actual dimensions may differ ±3cm (1.5") due to the product's handmade nature.

www.orientalbazarstudio.com
contact@orientalbazarstudio.com
Instagram:@oriental.bazar

FITTING OPTIONS

What's in the box

Option 1: Lampshade Only

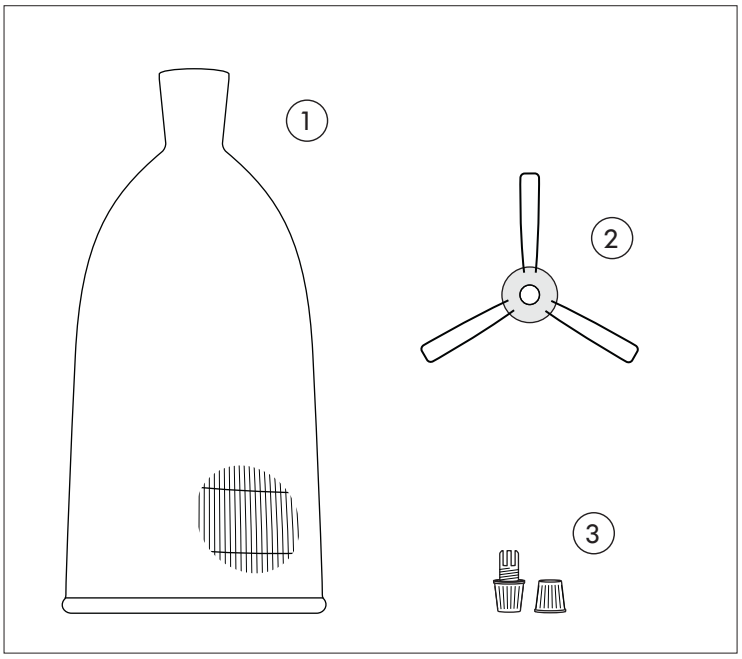

Option 2: Lampshade + Cord Kit

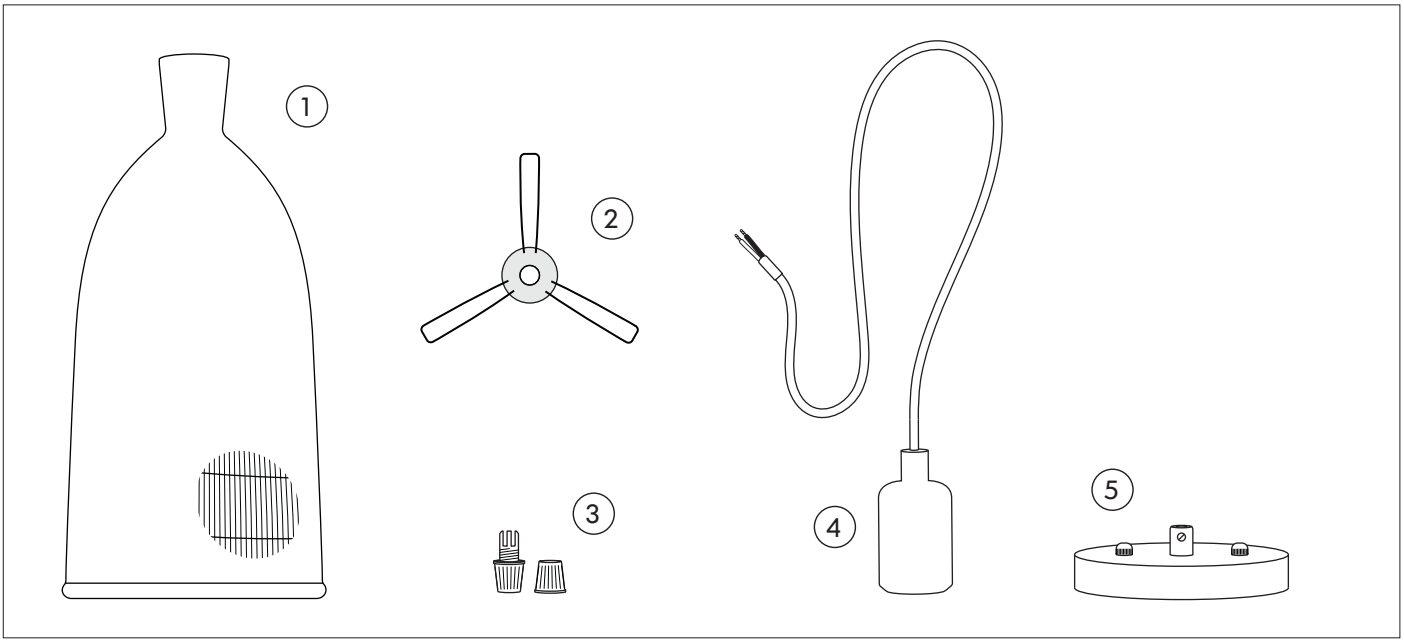

1. Lampshade
2. Metal Bracket
3. Cord Grips
4. Cord + Lamp Holder
5. Ceiling Canopy

1

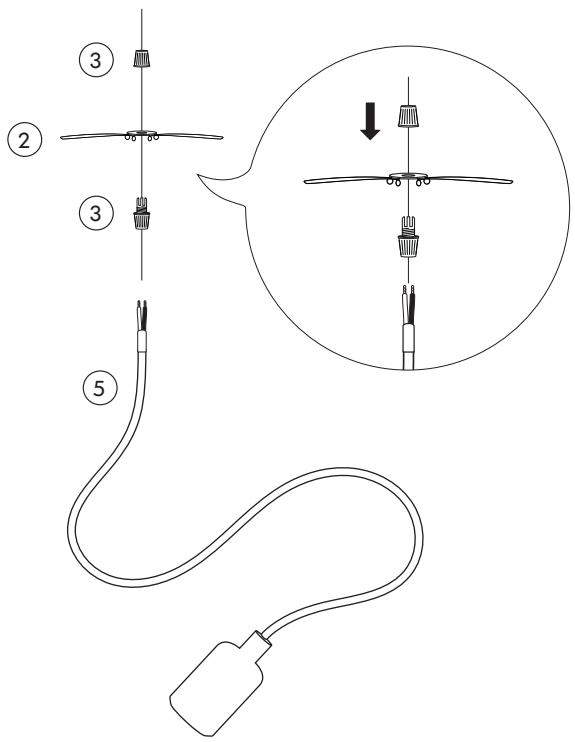

2

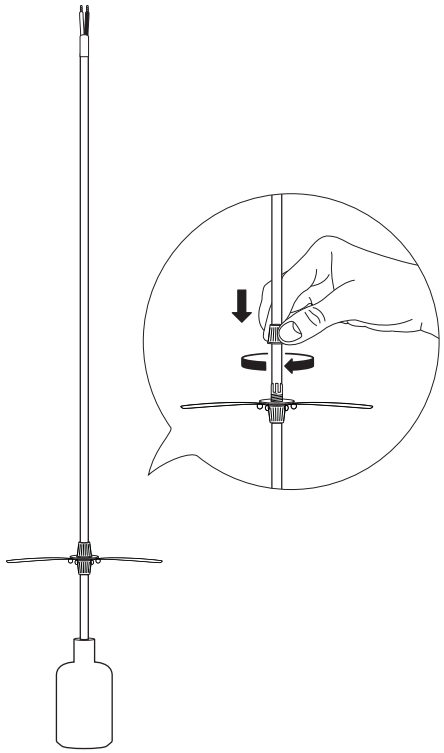

3

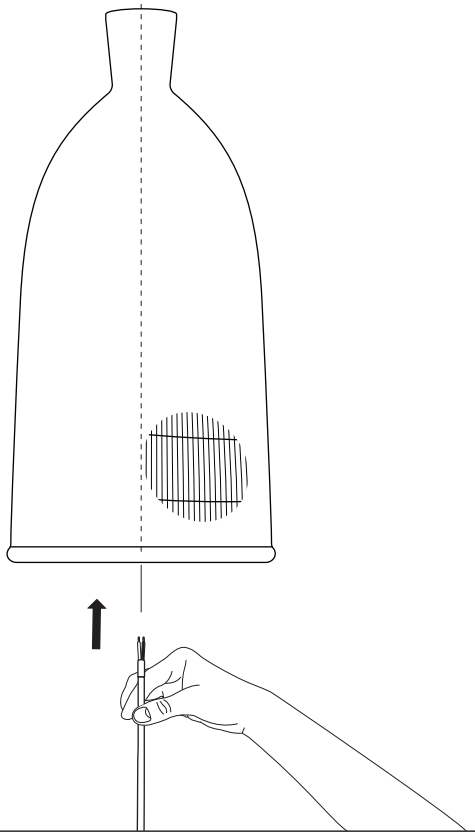

4

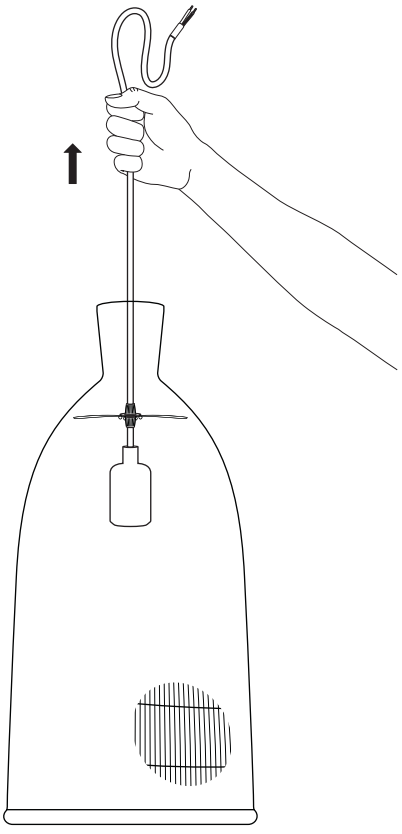

⚠ CAUTION: Before starting, turn off power at main circuit panel.

1

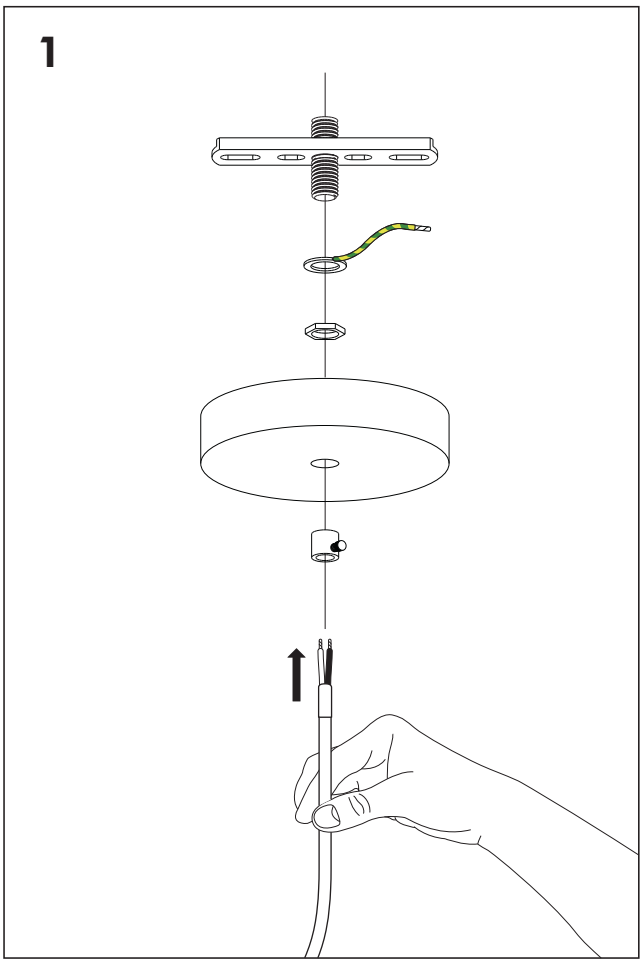

2

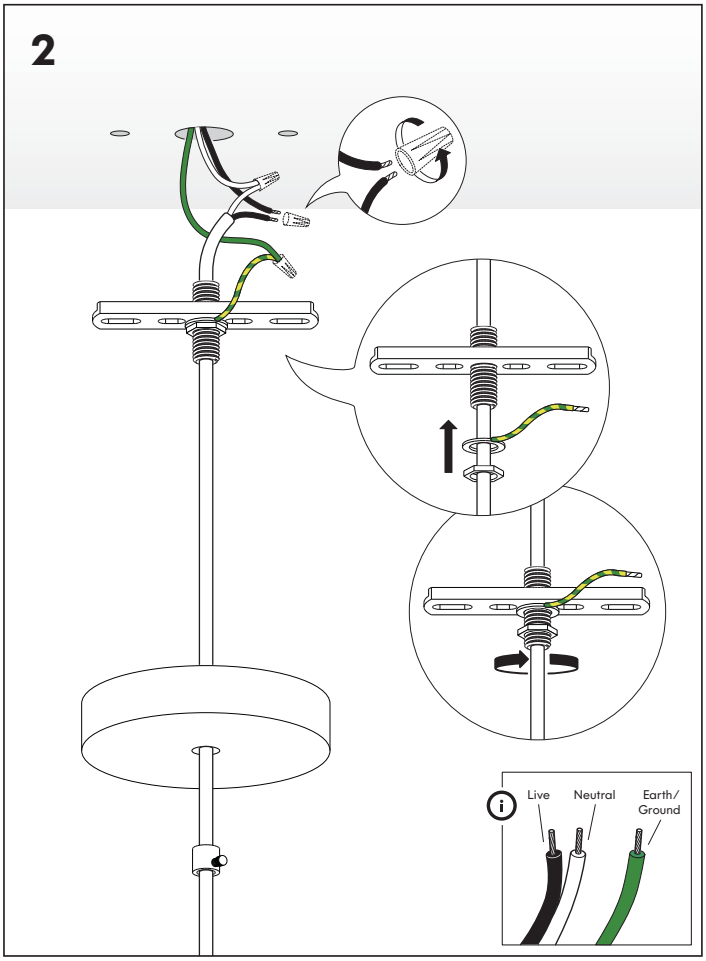

3

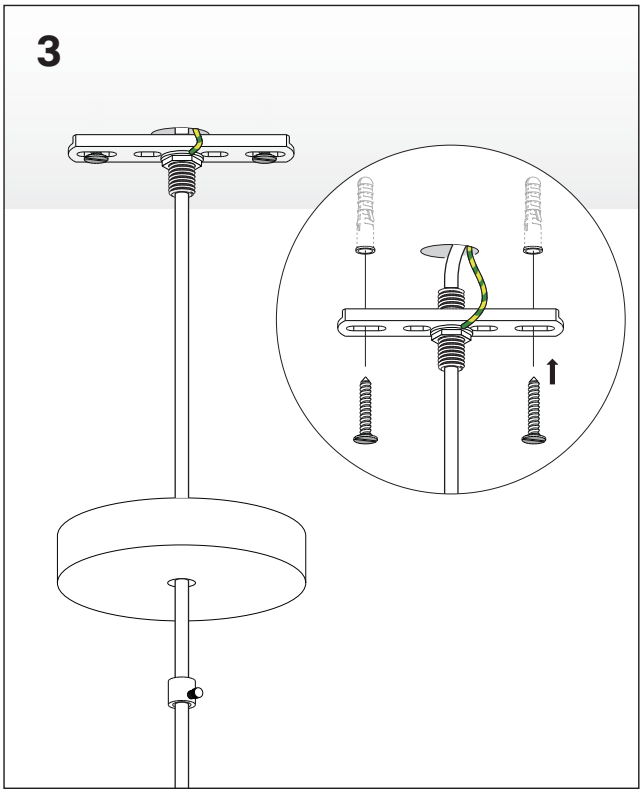

4

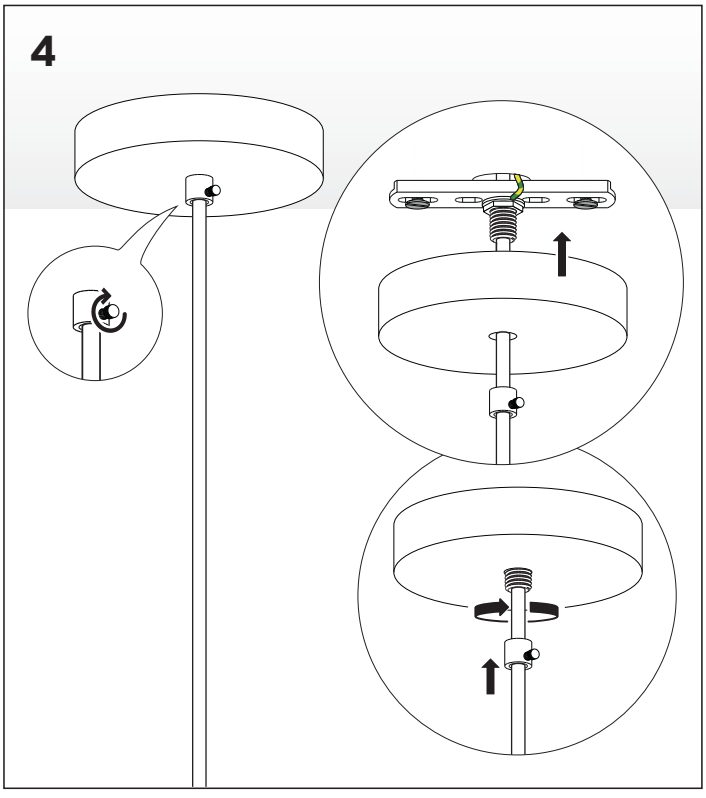

⚠ CAUTION: Before starting, turn off power at main circuit panel.

1

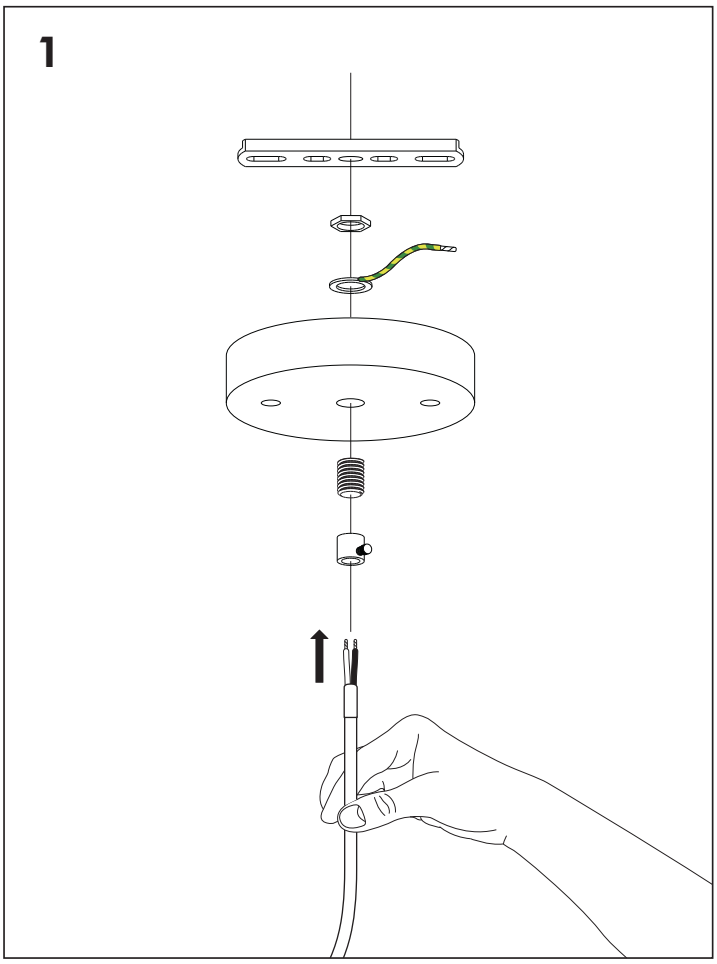

2

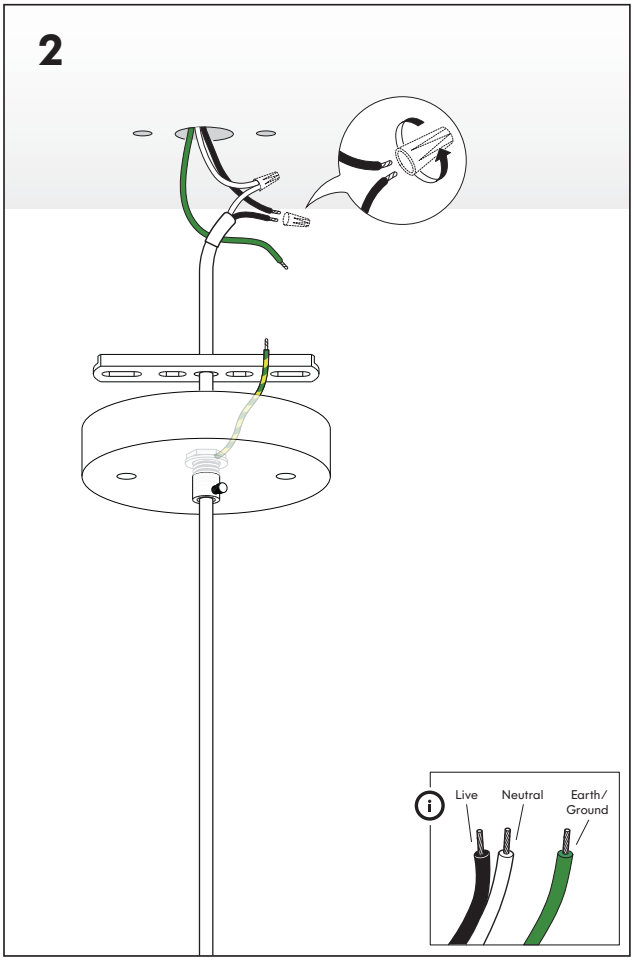

3

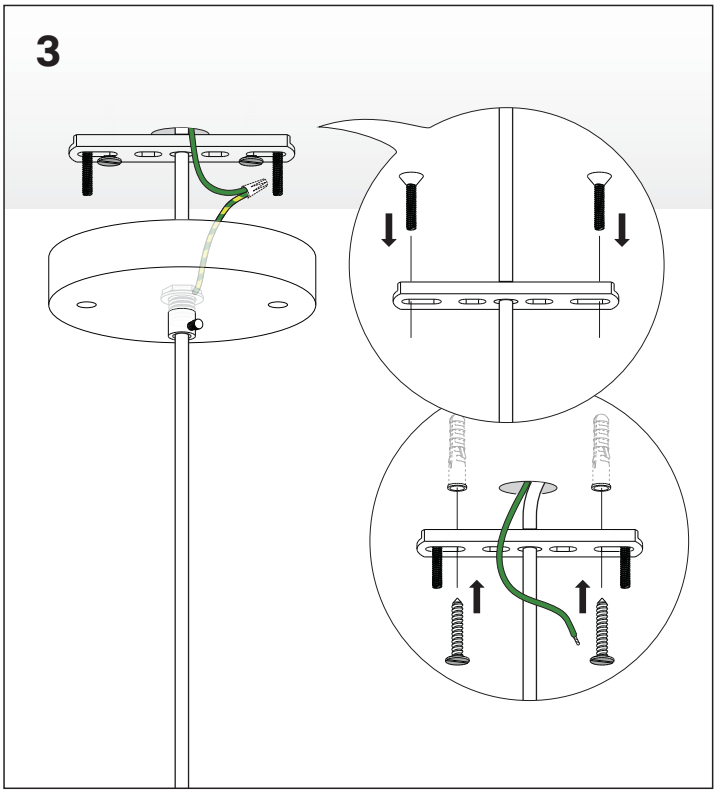

4

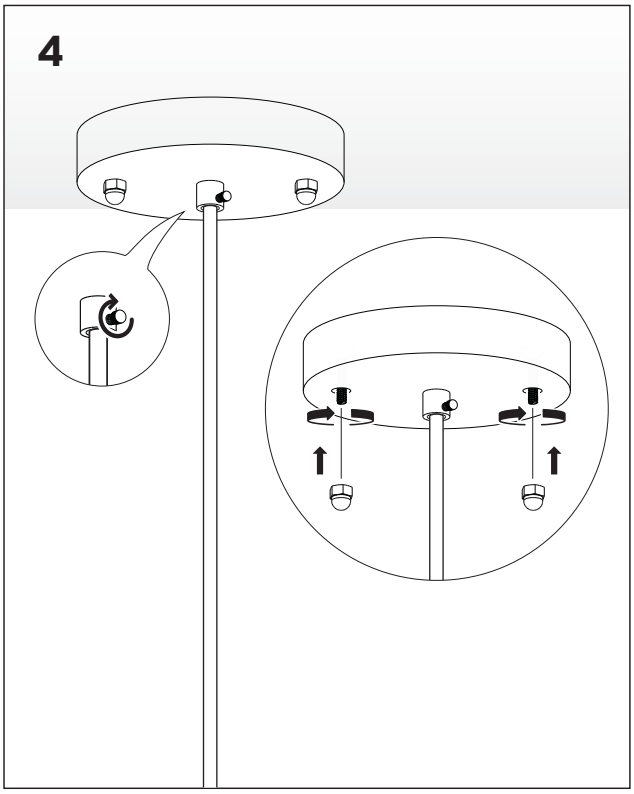

© Oriental Bazar Co., Ltd. 2020